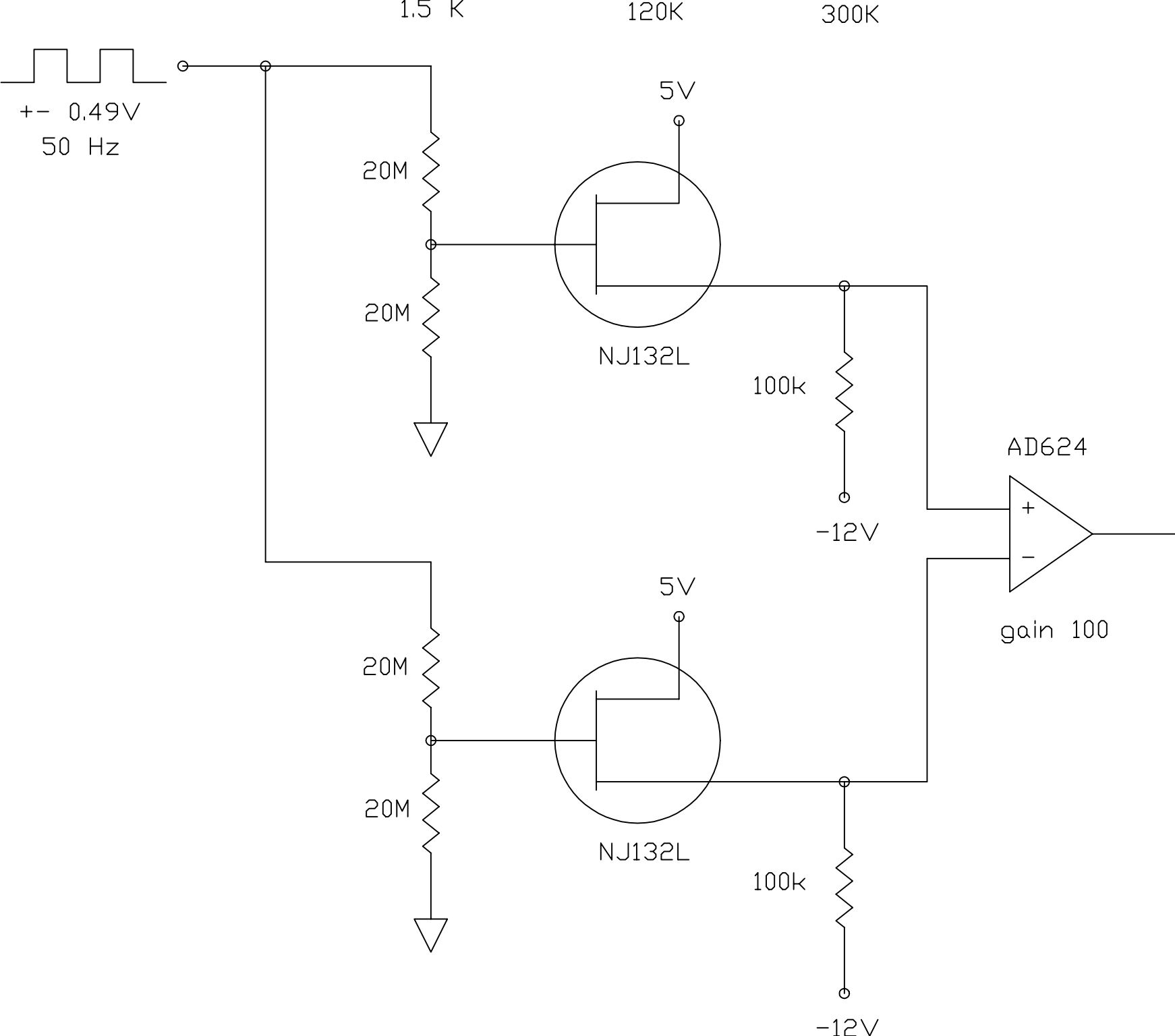
1.5 K
120K
300K
+- 0.49V
50 Hz
5V
20M
20M
NJ132L
100k
-12V
AD624
+
-
gain 100
5V
20M
20M
NJ132L
100k
-12V