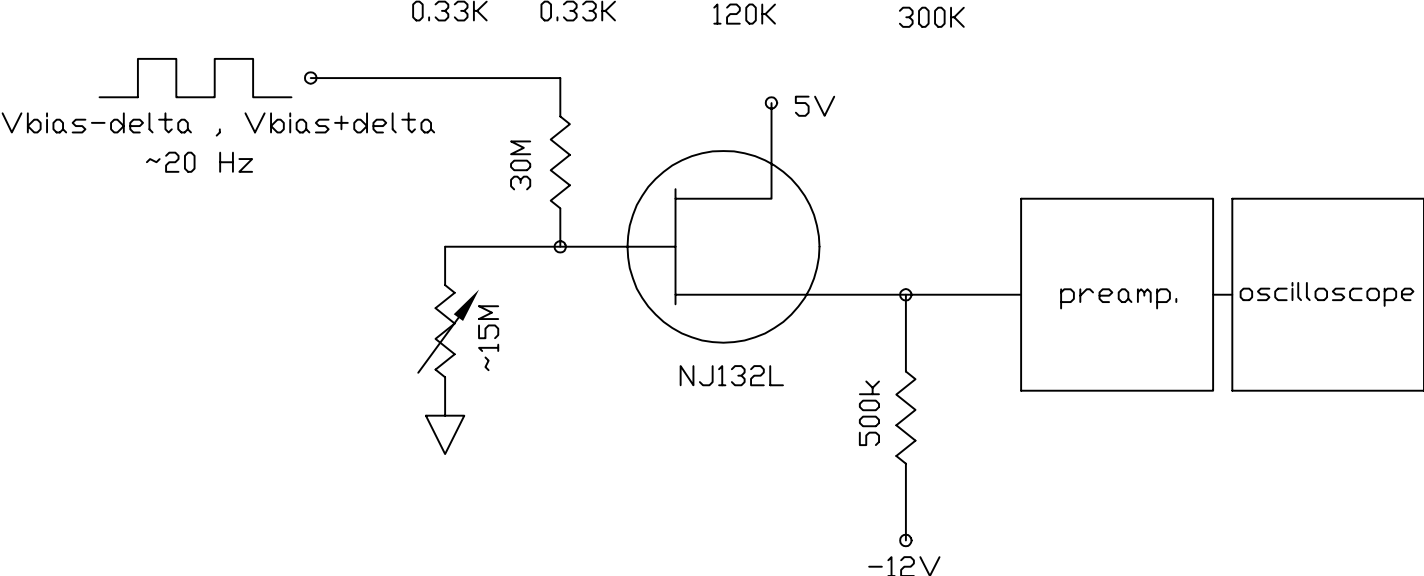
0.33K
0.33K
120K
300K
Vbias-delta , Vbias+delta
~20 Hz
30M
5V
~15M
NJ132L
500k
-12V
preamp.
oscilloscope