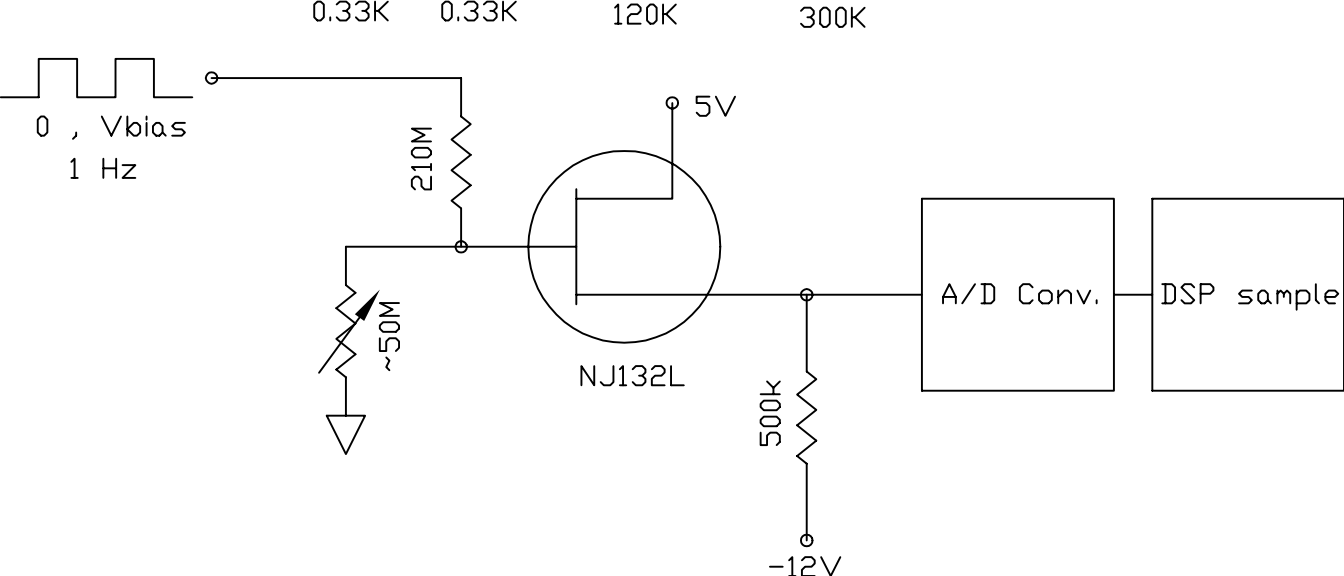
0.33K
0.33K
120K
300K
0 , Vbias
1 Hz
210M
5V
~50M
NJ132L
500k
-12V
A/D Conv.
DSP sample