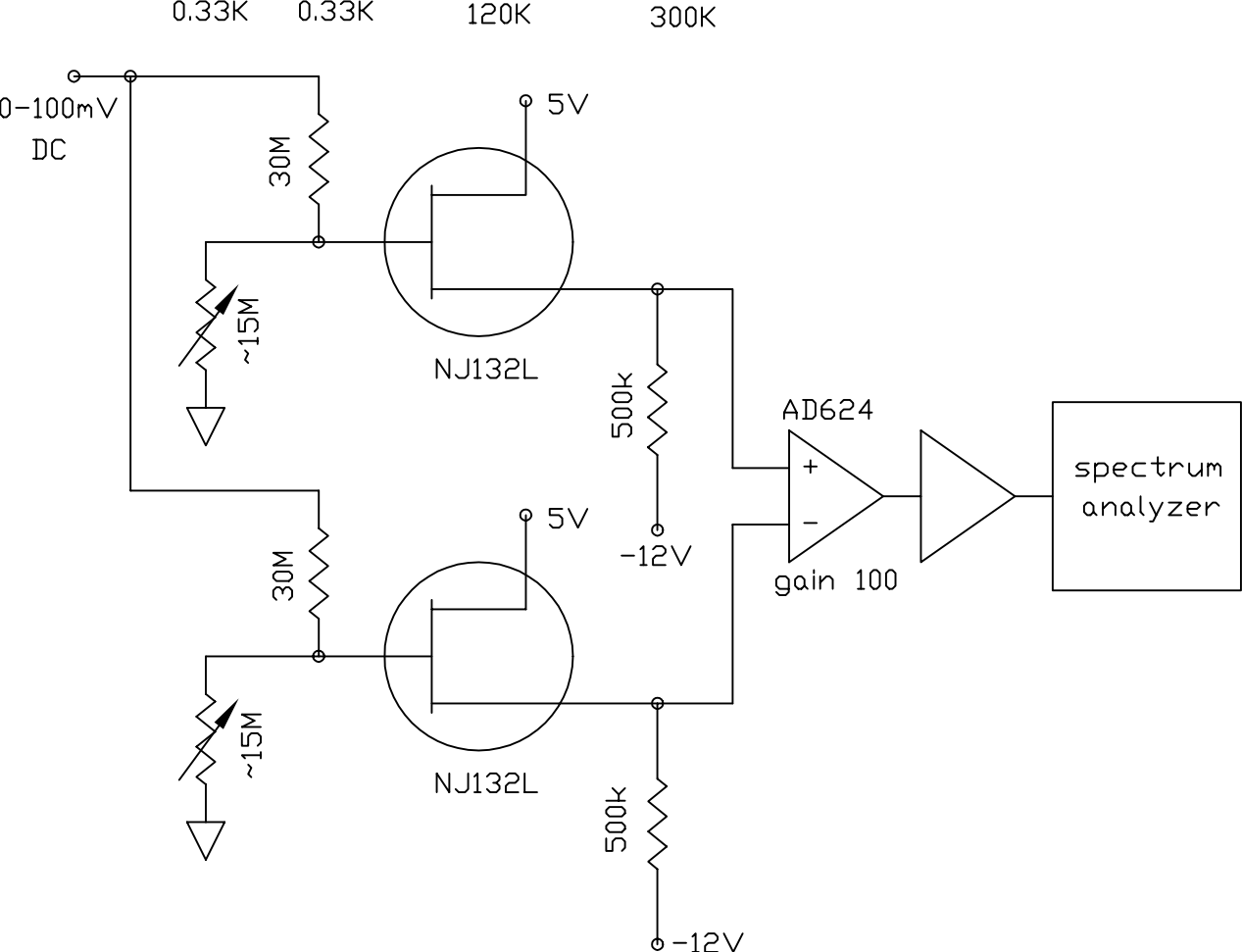
0.33K
0.33K
120K
300K
0-100mV
DC
30M
5V
~15M
NJ132L
500k
AD624
+
−
spectrum
analyzer
-12V
gain 100
30M
5V
~15M
NJ132L
500k
-12V