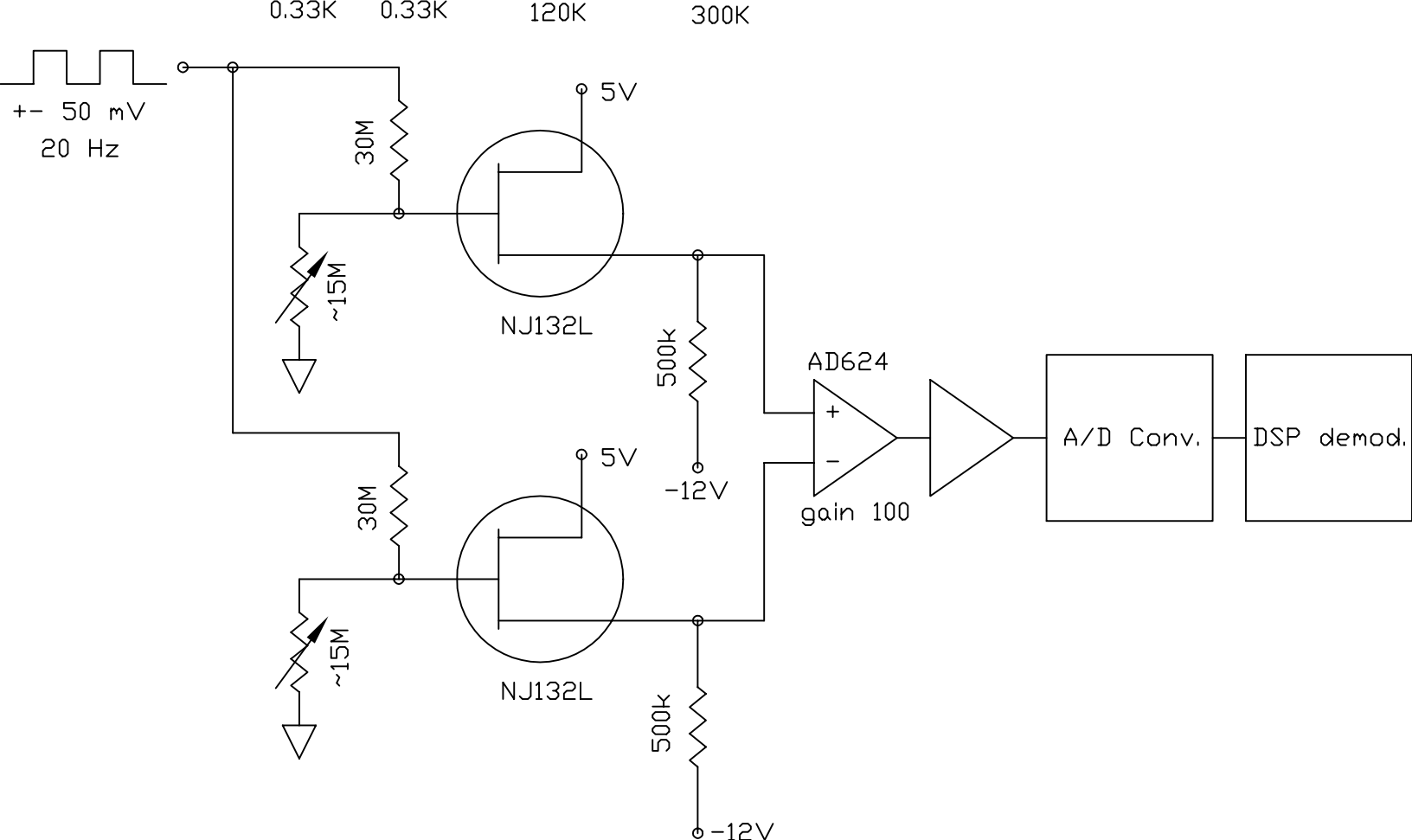
0.33K
0.33K
120K
300K
+- 50 mV
20 Hz
30M
5V
~15M
NJ132L
500k
AD624
+
-
gain 100
A/D Conv.
DSP demod.
30M
5V
-12V
~15M
NJ132L
500k
-12V